MANUAL POWERHEAD ASSEMBLY

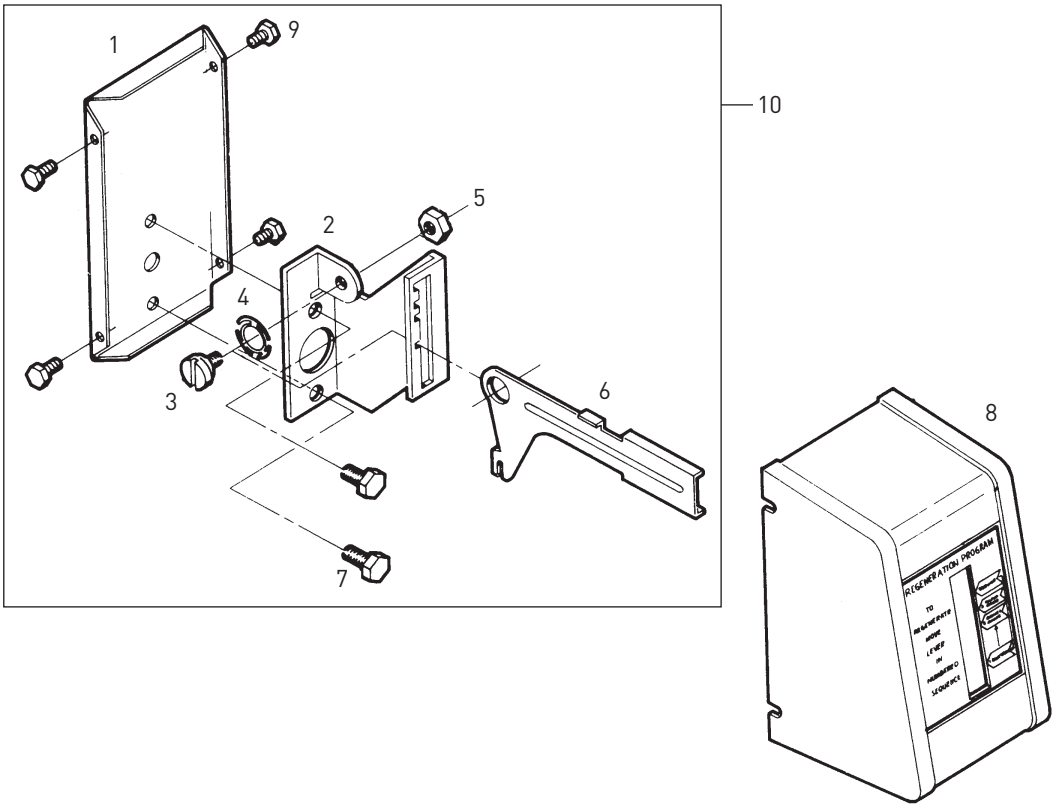

60409 Rev A

Item No.	QTY	Part No.	Description
1	1	12593	Backplate, Manual
2	1	12592	Bracket, Lever Position
3	1	12596	Screw, Spec Mach, 1/4 - 20 x 1/2
4	1	12707	Washer, Spring
5	1	11235	Nut, Hex, 1/4 - 20, Mach Screw, Zinc
6	1	12594	Lever, Valve Position
7	2	10231	Screw, Slot Hex, 1/4 - 20 x 1/2 18-8 SS
8	1	60224-32	Cover Assy, Manual, Filter
	1	60224-33	Cover Assy, Manual, Softener
9	4	10300	Screw, Slot Hex Wsh, 8-18 x 3/8 Type "B" RC44-47
10		60409	Powerhead Assy, Manual

Not Shown:

	1	10909	Pin, Link